TAKAGI MFG. CO., LTD.
HEATING & COOLING SYSTEM
MADE IN JAPAN

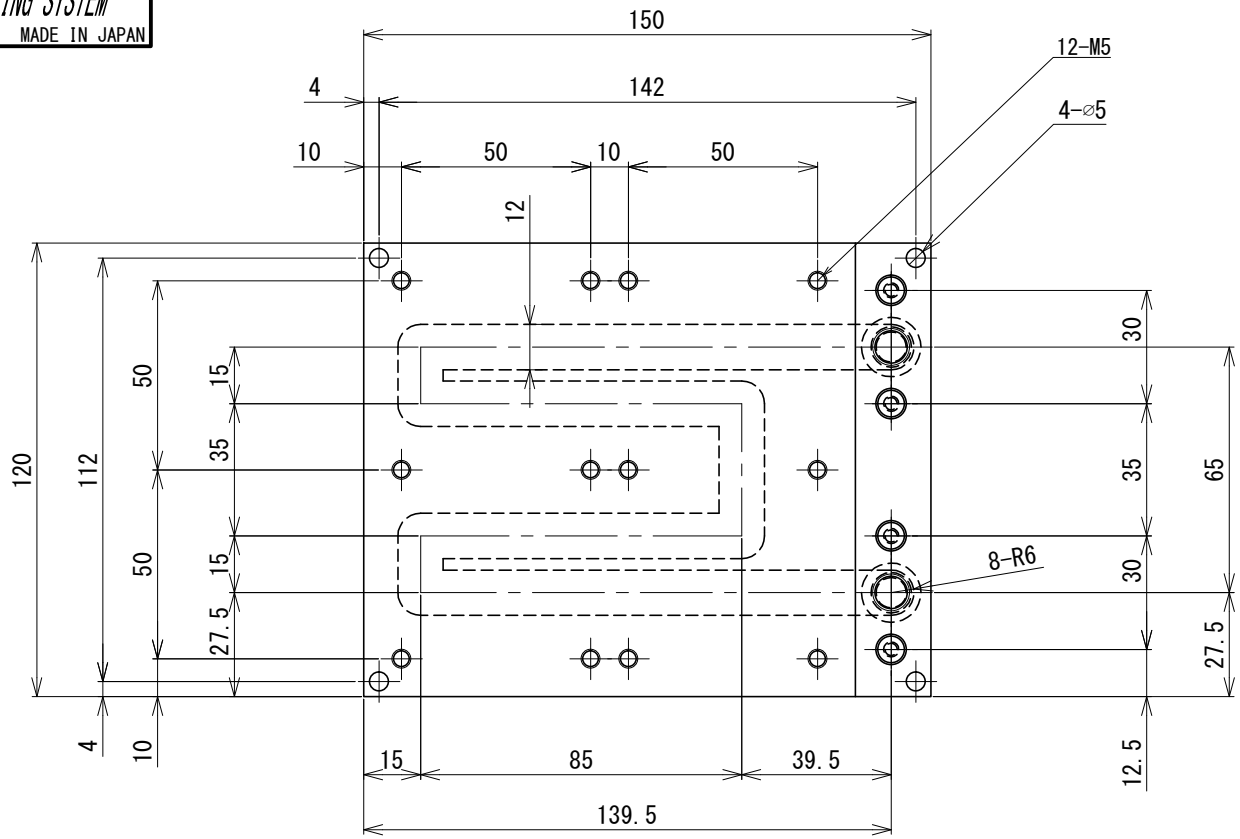

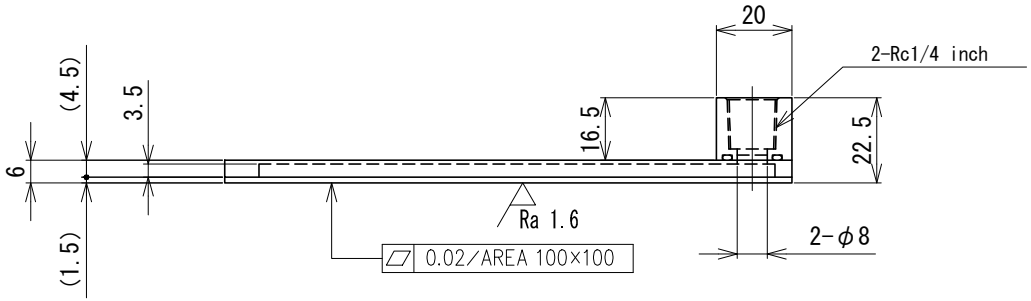

MATERIAL : A6061
WEIGHT : ABOUT 300 [g]
RECOMMENDED FLOW RATE : 3~6 [L/min]
(LIQUID: ANTICORROSIVE COOLANT
FOR AUTOMOBILE)
THERMAL RESISTANCE : BELOW 0.005 [℃/W]
(AT RECOMMENDED FLOW RATE)
SCALE : NOT TO SCALE (NTS)
UNIT : mm
PROJECTION : THIRD ANGLE PROJECTION METHOD
DIMENSIONAL TOLERANCE : ±0.5

1. Performance data on drawings, catalogs, handling manuals, and our documentation is reference only, and is not guaranteed.
2. This product is designed by us. Production and copy of this product without our permission is not permitted.

DATE:2013/12/01 (JAPAN)

TITLE
COLD PLATE

USE FOR
PELTIER DEVICE,OTHERS

ITEM NUMBER
P-400SAL