TAKAGI MFG. CO., LTD.

HEATING & COOLING SYSTEM

MADE IN JAPAN

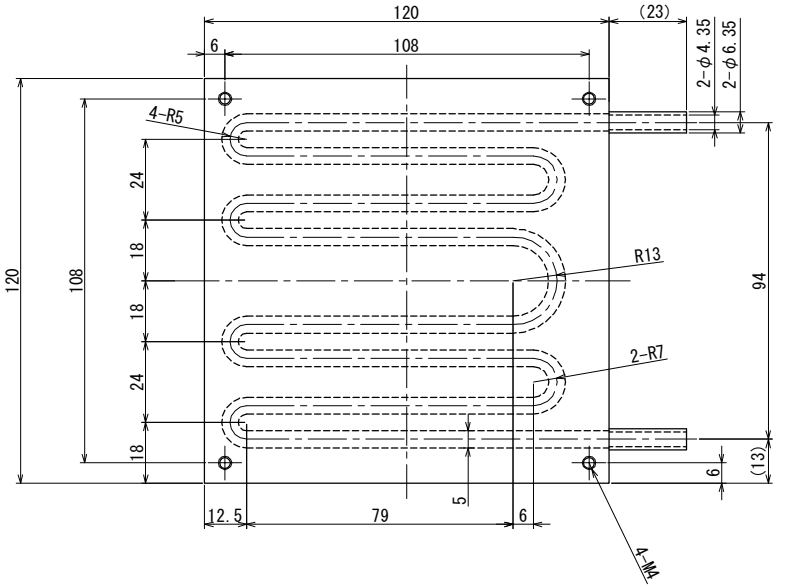

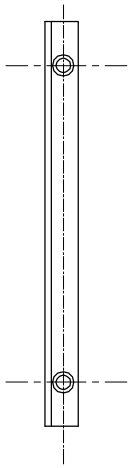

MATERIAL : C1020
WEIGHT : ABOUT 1 [kg]
RECOMMENDED FLOW RATE : 2~5 [L/min]
(LIQUID : WATER)
THERMAL RESISTANCE : BELOW 0.01 [℃/W]
(AT RECOMMENDED FLOW RATE)
SCALE : NOT TO SCALE (NTS)
UNIT : mm
PROJECTION : THIRD ANGLE PROJECTION METHOD
DIMENSIONAL TOLERANCE : ±0.5

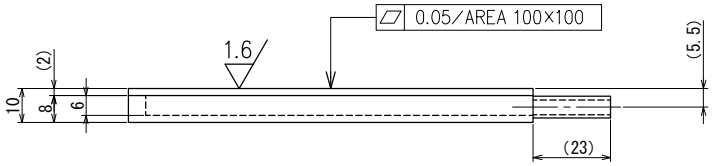

1. Performance data on drawings, catalogs, handling manuals, and our documentation is reference only, and is not guaranteed.
2. This product is designed by us. Production and copy of this product without our permission is not permitted.

DATE:2013/12/01 (JAPAN)

TITLE

COLD PLATE

USE FOR

CPU, PELTIER DEVICE, OTHERS

ITEM NUMBER

P-200S